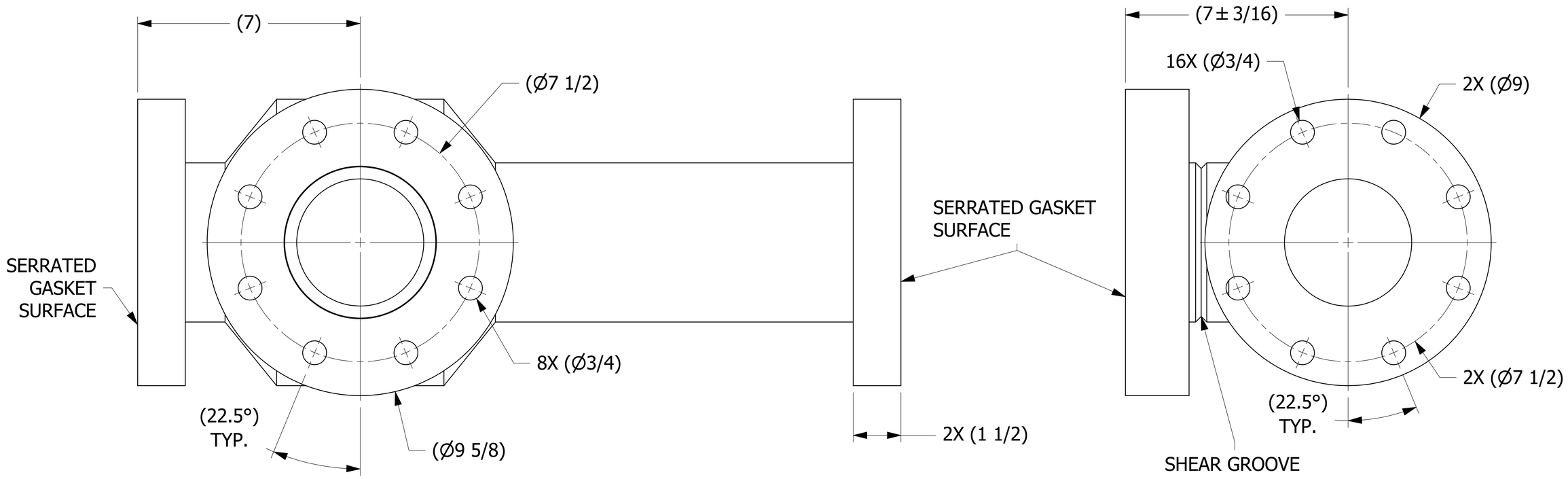


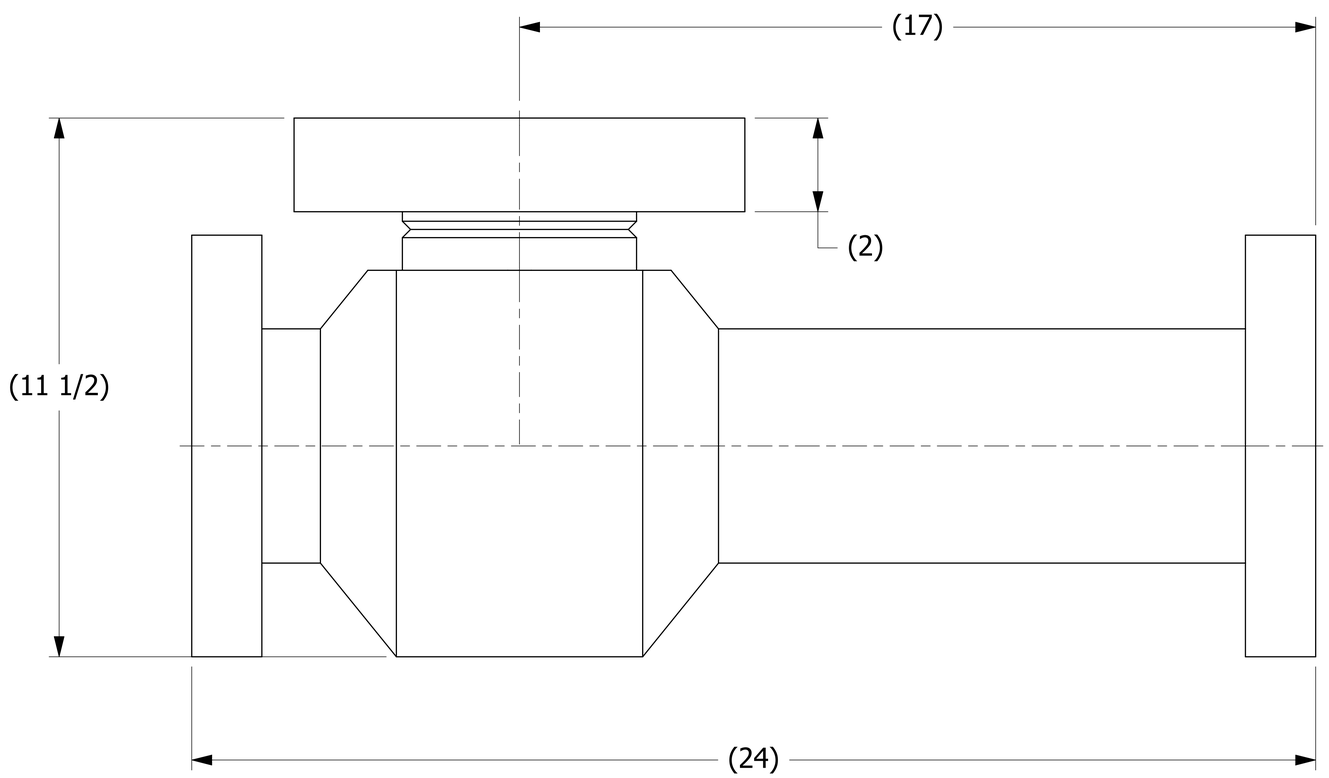


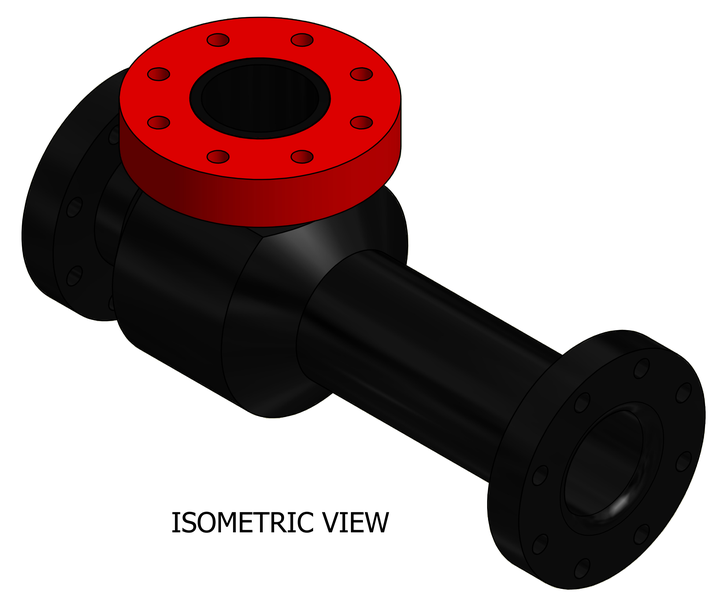

ISOMETRIC VIEW

SALES DRAWING SALES DRAWING

SALES DRAWING SALES DRAWING

NOTE:
SOLD TO WORLEY WELDING ONLY.

| REV | BY | DATE | DESCRIPTION |
|---|---|---|---|
| D | JG | 3-24-16 | UPDATED HS4PTB3; UPDATED NOTES, DIMS, TITLEBLOCK |
| C | KHK | 3-8-13 | UPDATED TO CURRENT DRAFT STANDARDS, SCALE WAS 1:1, TITLEBLOCK, 4.750 WAS 4.765 |
| B | GDS | 7-28-11 | ADDED MARKING PRESSURE NOTE |
| A | REH | 10-22-10 | ADDED PART TO SYSTEM |

UNLESS OTHERWISE SPECIFIED DIMENSIONAL TOLERANCES
FRACTIONAL: ±1/16
X.XX: ±.03
X.XXX: ±.015
ANGULAR: ±1°
DEBURR ALL SHARP EDGES. ALL MACHINED SURFACES TO HAVE A 125 RMS FINISH UNLESS NOTED OTHERWISE.
THIRD ANGLE PROJECTION

| | |
|---|---|
| DRAWN BY: | REH |
| CHECKED BY: | VD |
| PROTOTYPE BY: | REH |
| PROTOTYPE DATE: | 10/13/2010 |
| APPROVED FOR PRODUCTION BY: | WRB |
| PRODUCTION DATE: | 10/22/2010 |

SALCO PRODUCTS, INC.

PART NAME: PIPE TEE 4"

MATERIAL: SALCO PE

PROJECT #: WAG0870 | SHEET #: 1 OF 1 | SCALE: 4:5

DRAWING #: E29658 | PART #: HS4PT6

THIS PRINT, PROPERTY OF SALCO PRODUCTS INC, CONTAINS PROPRIETARY INFORMATION AND MUST NOT BE COPIED, REPRODUCED, OR USED DETRIMENTALLY TO OUR INTEREST.